TOTAL WEIGHT: 381 PLOT DATE: 06/16/2017 PLOT TIME: 09:09:18pm

REV	DATE	DESCRIPTION
0	06/16/2017	For Fabrication
A	05/10/2017	For Approval

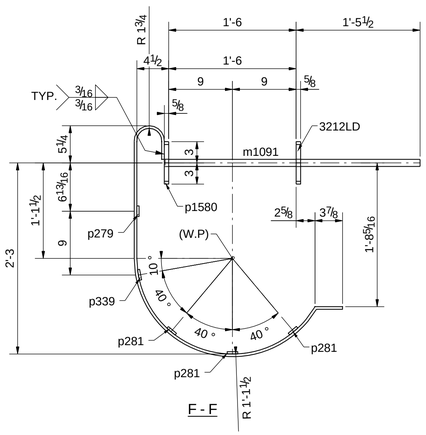

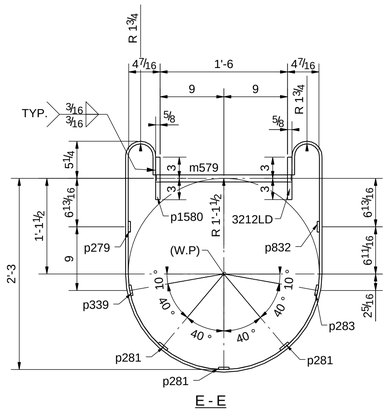

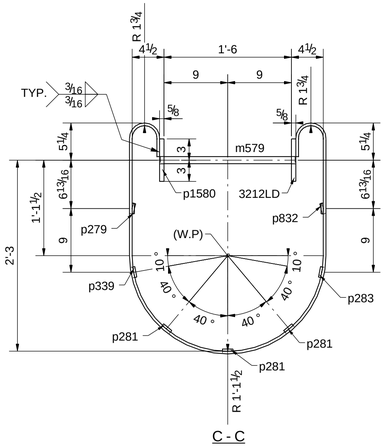

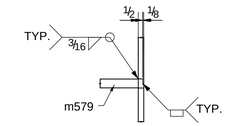

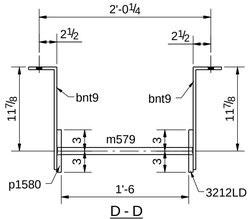

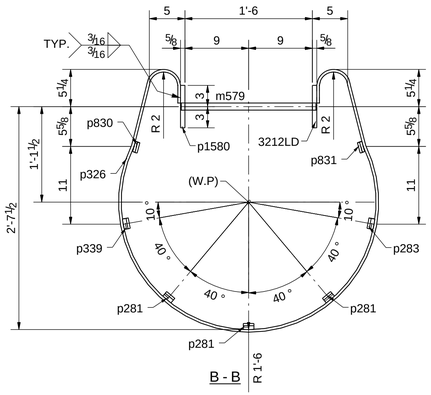

ONE - LADDER - 3212LD

SEQ	QTY
3A	1

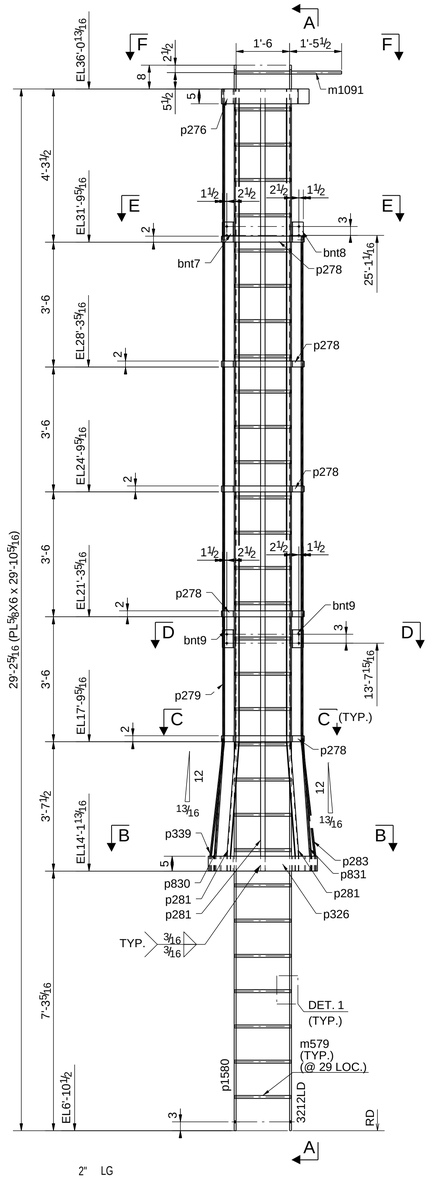

FIELD BOLT:
8 3/4" A325N-MG 2" LG

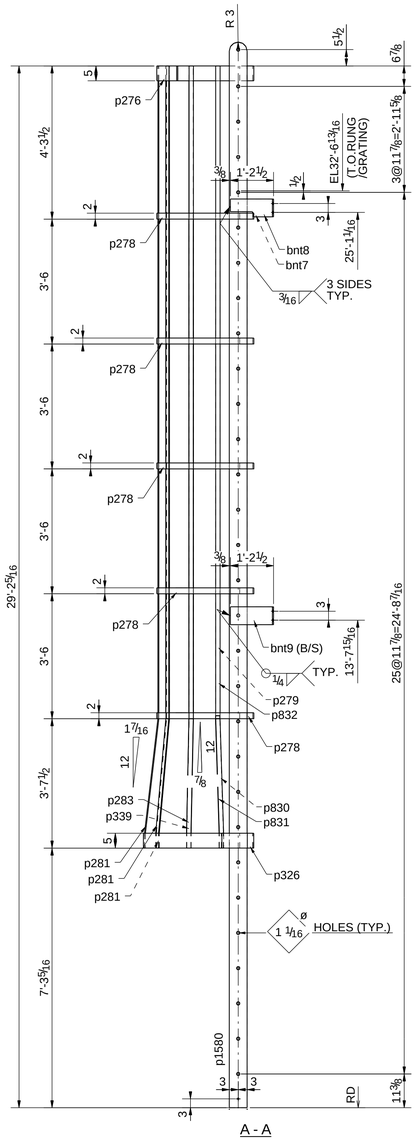

COATING:
SURFACE PREP: SSPC-SP2
PRIMER: HOT DIP GALVANIZED

1. ALL STRUCTURAL W & WT SHAPES SHALL CONFORM TO ASTM A992; ALL OTHER MATERIAL SHALL CONFORM TO ASTM A36 (U.N.O.)
2. BOLTS TO BE MG 3/4"Dia. A325N WITH 1HD WASH (U.N.O.) 3. SHOP CONNECTIONS SHALL BE WELDED WITH E70XX ELECTRODES
4. WELDS: 1/4" FILLET (U.N.O.) 5. COLUMN TAILS ARE FROM TOP OF BASE PLATE 6. BEAM TAILS ARE FROM LEFT END OF MEMBER
7. OPEN HOLES 13/16" Dia (U.N.O.) 8. ALL COLUMN BEARING AREAS TO BE MILLED.
9. ALL CONTACT SURFACES TO BE SEALED WITH AN 1/8" CONTINUOUS FILLET WELD.

BILL OF MATERIAL

QTY TOTAL	QTY UNIT	PIECE MARK	MINOR MARK	DESCRIPTION	LENGTH FT.IN.	REMARKS	WEIGHT UNIT	WEIGHT TOTAL	STEEL GRADE	PAY CODE
1	1	3212LD		PL5/8"X6"	29'-10 5/16"		376	376	A36	
1	1		bnt7	PL3/8"X6"	1'-5 3/4"	BENT	10	10	A36	
2	2		bnt9	PL3/8"X6"	1'-5 3/4"	BENT	12	23	A36	
1	1		m1091	1"Ø REBAR	3'-0"		0	0	A716	
5	5		p278	PL3/8"X2"	7'-9 5/8"	ROLLED	20	99	A36	
3	3		p281	PL5/16"X1 1/2"	21'-11 1/4"	BENT	35	105	A36	
1	1		p326	PL3/8"X5"	9'-1 5/16"	ROLLED	58	58	A36	
1	1		p830	PL5/16"X1 1/2"	3'-8 9/16"	BENT	6	6	A36	
1	1		p832	PL5/16"X1 1/2"	14'-1"	BENT	22	22	A36	

BILL OF MATERIAL

QTY TOTAL	QTY UNIT	PIECE MARK	MINOR MARK	DESCRIPTION	LENGTH FT.IN.	REMARKS	WEIGHT UNIT	WEIGHT TOTAL	STEEL GRADE	PAY CODE
1	1		bnt8	PL3/8"X6"	1'-5 3/4"	BENT	10	10	A36	
29	29		m579	1"Ø REBAR	1'-7"		0	0	A716	
1	1		p276	PL3/8"X5"	5'-4 9/16"	ROLLED	34	34	A36	
1	1		p279	PL5/16"X1 1/2"	18'-2 1/2"	BENT	29	29	A36	
1	1		p283	PL5/16"X1 1/2"	17'-9 3/4"	BENT	28	28	A36	
1	1		p339	PL5/16"X1 1/2"	21'-11 1/4"	BENT	35	35	A36	
1	1		p831	PL5/16"X1 1/2"	3'-8 9/16"	BENT	6	6	A36	
1	1		p1580	PL5/8"X6"	29'-10 5/16"		376	376	A36	

BILL OF MATERIAL

QTY TOTAL	QTY UNIT	PIECE MARK	MINOR MARK	DESCRIPTION	LENGTH FT.IN.	REMARKS	WEIGHT UNIT	WEIGHT TOTAL	STEEL GRADE	PAY CODE

AISC CERTIFIED FABRICATOR

CUSTOMER:	DRAWN BY	CHECKED BY	SEQUENCE NO:	REFERENCE DRAWING	DATE	JOB NO.	DWG. NO.
PROJECT:			3A	E329	06/16/2017		3212