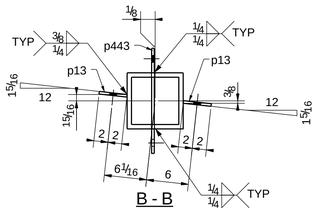

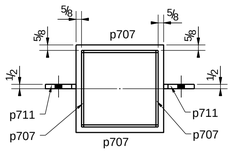

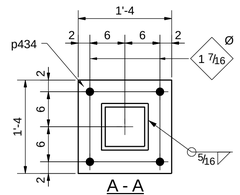

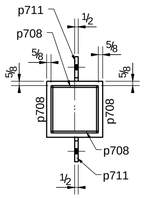

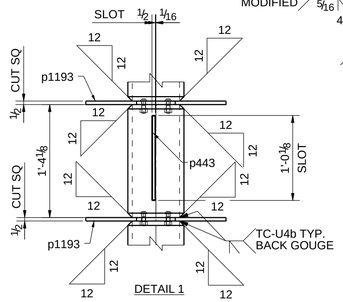

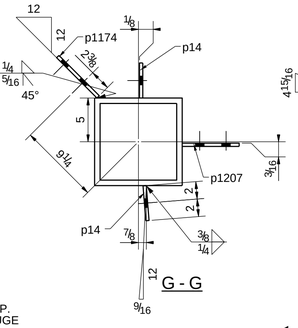

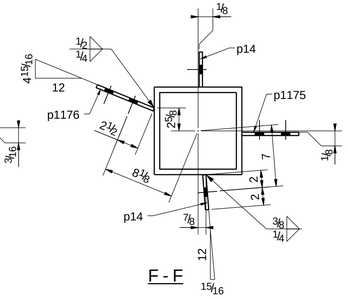

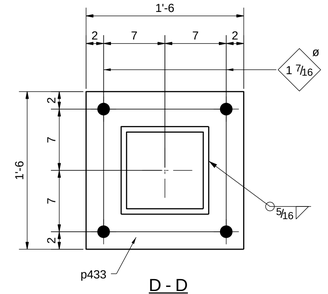

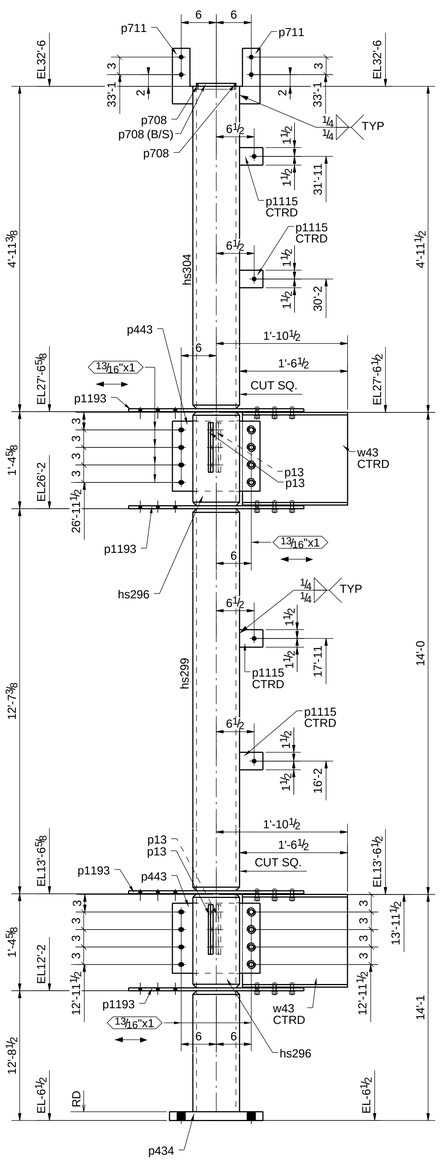

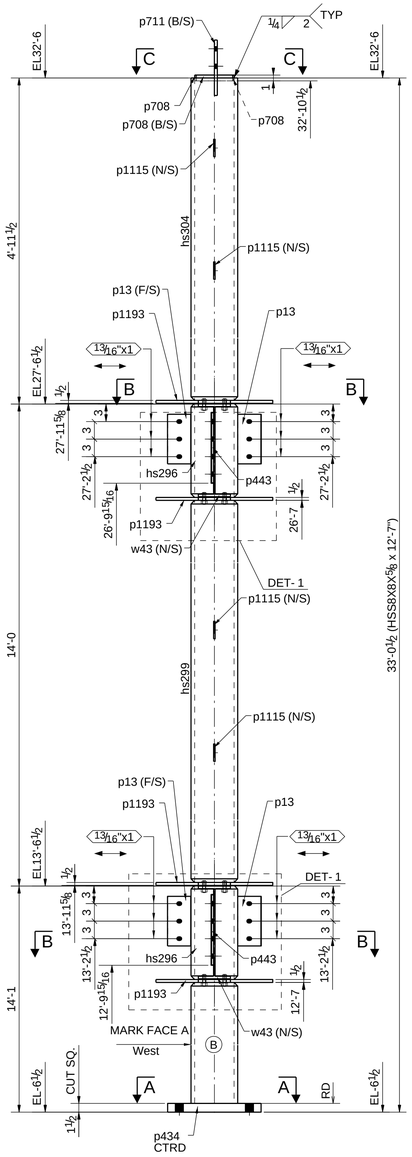

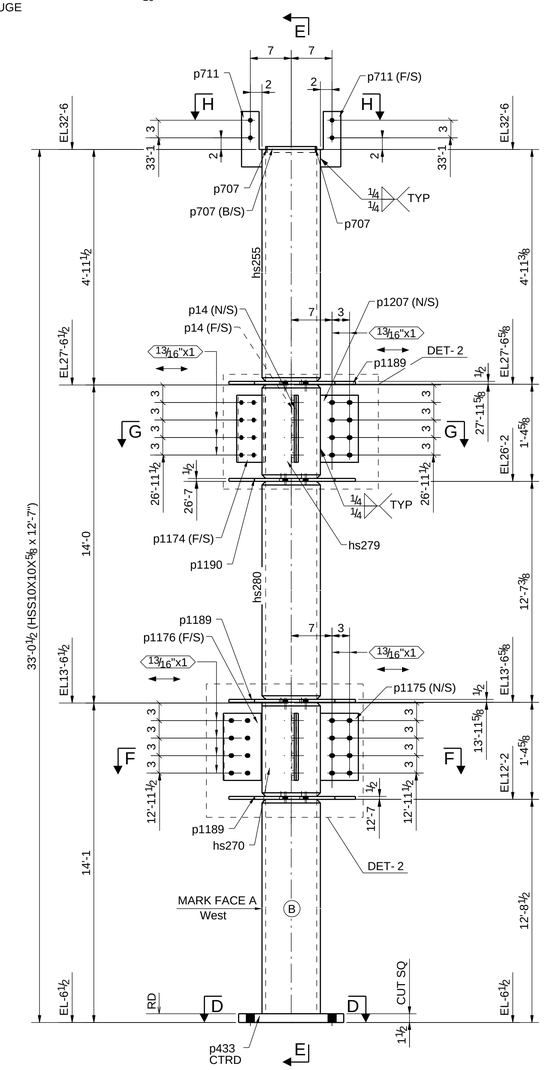

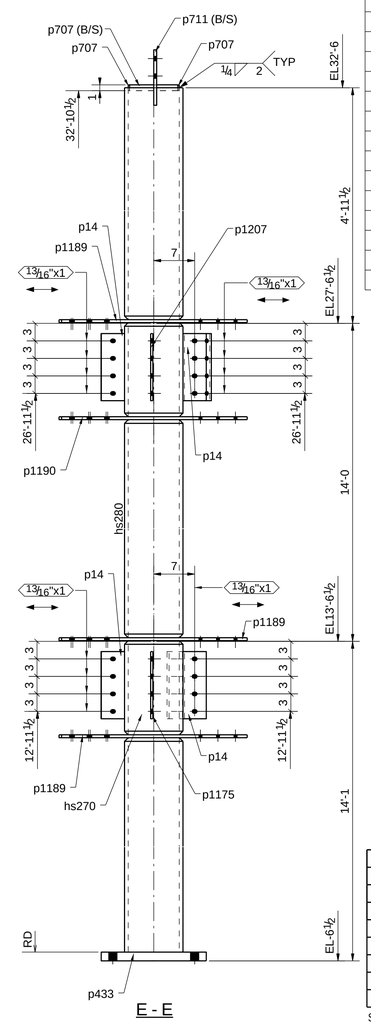

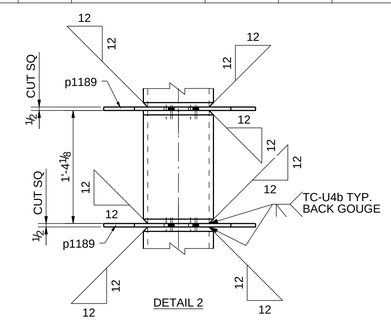

BILL OF MATERIAL

Qty Ea.	Qty Tot	Piece Mark	Description	Length	Weight Total	Remarks	Adv Mill #	Steel Grade
	1	4004C1	COLUMN					
1	1		HSS8X8X5/8	12'-7"	702			A500-GR.B
2	2	hs296	HSS8X8X5/8	1'-4 1/8"	150			A500-GR.B
1	1	hs299	HSS8X8X5/8	12'-6 7/8"	702			A500-GR.B
1	1	hs304	HSS8X8X5/8	4'-10 7/8"	274			A500-GR.B
4	4	p13	FL3/8"X4"	0'-8 1/2"	14			A36
1	1	p434	PL1 1/2"X16"	1'-4"	109			A36
2	2	p443	FL3/8"X12"	1'-3"	38			A36
4	4	p708	FL1/4"X1"	0'-6 1/4"	2			A36
2	2	p711	FL1/2"X3 1/2"	0'-9 1/2"	9			A36
4	4	p1115	FL1/4"X3"	0'-4"	3			A36
4	4	p1193	PL1/2"X20"	2'-6"	275			A36
2	2	w43	W16X31	1'-6"	93			A992
24	24		1/2"Ø A325N_TC BOLT	0'-1 3/4"	5	Workshop		
8	8		3/4"Ø A325N_TC BOLT	0'-1 3/4"	4	Workshop		
	1	4004C2	COLUMN					
1	1		HSS10X10X5/8	12'-7"	899			A500-GR.B
1	1	hs255	HSS10X10X5/8	4'-10 7/8"	351			A500-GR.B
1	1	hs270	HSS10X10X5/8	1'-4 1/8"	96			A500-GR.B
1	1	hs279	HSS10X10X5/8	1'-4 1/8"	96			A500-GR.B
1	1	hs280	HSS10X10X5/8	12'-6 7/8"	899			A500-GR.B
4	4	p14	FL3/8"X4"	0'-11 1/2"	20			A36
1	1	p433	PL1 1/2"X18"	1'-6"	138			A36
4	4	p707	FL1/4"X1"	0'-8 1/4"	2			A36
2	2	p711	FL1/2"X3 1/2"	0'-9 1/2"	9			A36
1	1	p1174	FL3/8"X6 1/2"	0'-11 1/2"	8			A36
1	1	p1175	FL3/8"X6 1/2"	0'-11 1/2"	8			A36
1	1	p1176	PL3/8"X7"	0'-11 1/2"	9			A36
3	3	p1189	PL1/2"X21 11/16"	2'-8 3/16"	240			A36
1	1	p1190	PL1/2"X21 11/16"	2'-8 3/16"	80			A36
1	1	p1207	FL3/8"X6 1/2"	0'-11 1/2"	8			A36

ONE - COLUMN - 4004C2

ONE - COLUMN - 4004C1

E - E

GRID LOCATION
/C.W

GRID LOCATION
/C.W

ERECTION BOLTS				
QUAN.	SIZE	LENGTH	TYPE	
24	1/2"	0'-1 3/4	A325N_TC W/ 1-NUT & 1-WASHER	Workshop
8	3/4"	0'-1 3/4	A325N_TC W/ 1-NUT & 1-WASHER	Workshop

SHOP NOTES:
A36 U.N.O
E70XX

PAINT ONE S/C STANDARD PRIMER HOLES 13/16Ø U.N.O UNL. NTD.

CITY OF HOUSTON APPROVED FABRICATOR #867

NOTICE TO CONTRACTORS AND ERECTOR

BACK CHARGES FOR CORRECTIVE WORK OR REPLACED MATERIALS WILL NOT BE ACCEPTED UNLESS AUTHORIZED IN WRITING BY POSTEL INTERNATIONAL INC. BEFORE SUCH COSTS ARE INCURRED

For Approval

REF.DWG.
E4000 & E4003

REVISIONS		
NO.	DATE	BY
A	04/13/2015	S.A

PROJ.

DRAWN BY: DATE: 04/13/2015 CHK'D BY: DATE: 04/13/2015 JOB NO. SHEET NO. 4004 A